DEWIMED®
SMART INNOVATION

O.S.A.S.

Orthodontic Skeletal Anchorage System

DEWIMED Medizintechnik GmbH, Unter Hasslen 14, 78532 Tuttlingen - Germany
Tel. ++49-7462-923 93 0 Fax. ++49-7462-923 93 33 **info@dewimed.de**

O.S.A.S. Orthodontic Skeletal Anchorage System

The future of orthodontic anchorage implants is the mini titanium screw.

In contrast to traditional treatment there is no need for anchorage teeth anymore, so teeth movement can be realized even if there are teeth missing.

Thanks to mini screws extra oral equipment becomes unnecessary. They allow effective working without being dependent on cooperation of individual patients.

Minimal size, as well as the complication-free use of mini screws opens an innovative clinical therapy spectrum. This means biomechanically creative solutions, a shorter treatment period and exact and effective tooth movements become a common way of working for orthodontics.

The extremely stable and highly flexible O.S.A.S. Screws have a diameter of 1.6 mm (core diameter 1.1 mm) and vary in the lengths between 5 and 10 mm. All screws do have a self drilling and self tapping pin to assure an easy and safe insertion into the bone.

The direct implant fixation allows an immediate transmission of forces to the implant. In general, the implants are loaded immediately after insertion. In contrast to conventional implants micro screws are not completely osseointegrated. Temporary limited application time for orthodontic purposes with its incomplete integration is not clinically detrimental- it makes the later implant removal even easier.

Every O.S.A.S. Screw is made of titanium (Ti6Al4V) which is the globally successful, safe and experienced material with particularly high biocompatibility.

Each orthodontic treatment is individual, so mini screws have to be individual as well. Five different types of heads enable the perfect solution for each orthodontic condition. Bone structure, insertion area and gingival condition are deciding your choice of screw.

INDEX

Comments ..... 4 - 5

Clinical cases ..... 6 - 11

Skeletal Anchorage ..... 12 - 15

O.S.A.S. Screws ..... 16 - 21

O.S.A.S. Instruments ..... 22 - 23

Racks ..... 24 - 26

Using DEWIMED mini implants since several years I can highly recommend them. Highlights for me are clearly the very easy insertion and the very good stability which led to a loss rate of nearly 0%! Also, as an experienced user of fixed lingual appliances, I am happy about the brandnew screw, especially designed for anchorage in lingual orthodontics and for palatally anchored distalization appliances. This mini implant is another milestone of the DEWIMED O.S.A.S. System.

Prof. Dr. Martin Baxmann
Germany

Working with DEWIMED mini implants since 2008 has allowed me to significantly improve my orthodontic practice through creating simple, efficient and predictable clinical protocols of highly complex dental movements. These protocols include intrusion, retraction, open bite closure, etc. and are characterized by the manipulation of the line of action of the resultant force in relation to the center of resistance of the active unit in order to create statically determined force systems. Manipulating forces in relation to the center of resistance is the key for clinical success.

Clinical handling of DEWIMED O.S.A.S. mini implants is simple. There is a short learning curve to achieve mastery in insertion. After inserting more than 700 DEWIMED O.S.A.S. screws on my patients, I can assure that fracture is virtually reduced to zero when manipulation is precise. After all, I have not fractured any mini implant yet.

Dr. Eduardo Morzán
Peru

After having used since 2009 different types of DEWIMED mini implants and resolved various types of malocclusions with them, I can recommend them widely for clinical stability, tolerance by patients and easy insertion.

Dr. Ricardo Medellín
México

Dr. Masaki Itagaki
Japan

The failure rate of mini implants in orthodontic anchorage is still high, and it bothers many doctors; especially, cortical bone in labial aspect of the maxillary is thin and soft so that the failure rate is higher.
As a solution of this problem, single mini implant is inserted in the palatal side of the maxillary, or multiple mini implants are used with plate.
However, if there is the sufficient space in the second molar for retraction, and the cortical bone is hard enough, O.S.A.S. screws enable to retract the maxillary and mandibular teeth in order to deal with the optimal insertion angle and position without extraction of premolar with dedicated instruments.

O.S.A.S. screws provide the conventional way to screw between the two roots of a tooth as maximum anchorage as well as the en-masse movement of dentition.

Prof. Dr. Júlio de Araújo Gurgel
Brasil

DEWIMED mini implant is a great product!! Easy insertion and low profile head became them useful for placement in multiple jaws areas. Using the DEWIMED system since 2007, I have never done prior cortical bone perforation, even in posterior mandibular area. The polishes threads offer easy insertion and removal resulting in considerably shorter side chair time.

Four steps to a perfect anchorage!

Self-drilling and self tapping screw to facilitate the setting, the O.S.A.S. Screw head offers ideal conditions for the surrounding gingiva.

1. X-ray

2. Position

3. Screw

4. Immediately use

Original Size

Scale 1:1

Clinical cases

Distalisation of canine tooth

Mesialisation of molar

Intrusion of incisors

Clinical Cases

A 18 years old, male patient has Protrusion of the upper and lower lips. With help of DEWIMED SLOT Screw on the labial sides of the maxilla and the mandible and an implantation on the palatal side of the maxilla the tooth could be moved in the wished position. The orthodontic treatment was done within 23 months.

Initial

after Extraction of 3rd Molar, after 6 months

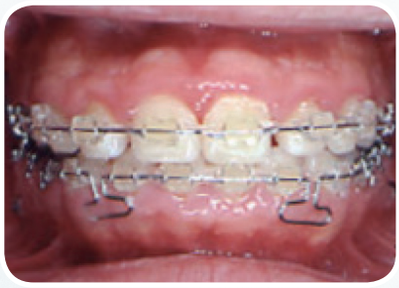
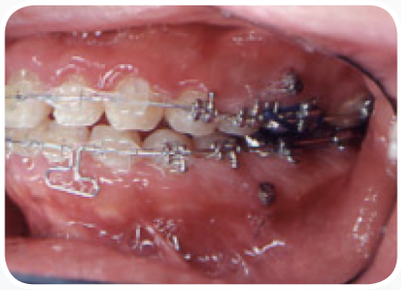

after 18 months

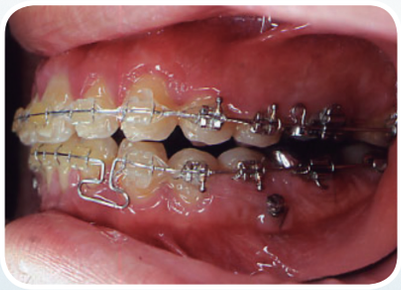

after 23 months

Clinical Cases

Class II 26 years old male patient (Fig. 1)
Unfortunately at the beginning of its orthodontic treatment the extraction of mandibular right first molar was required by his condition (Fig. 2).

Figure 1:

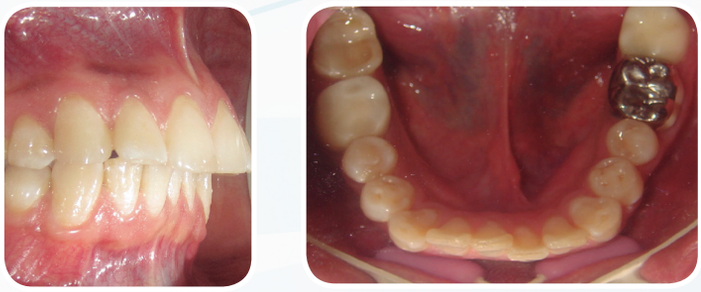

Figure 2:

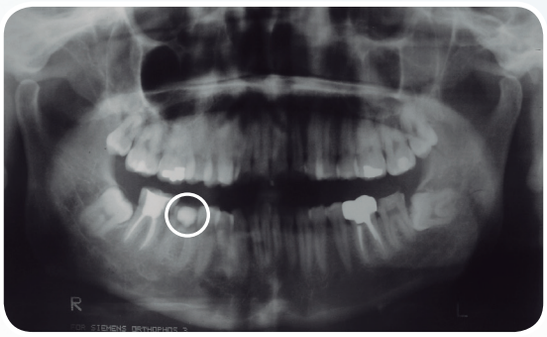

At a patient having this bone characteristics is not easy to mesialize the second molar and take the third as option for restore posterior occlusion with traditional orthodontics. So it was necessary to place a Mini Implant (DEWIMED M.O.S.A.S. 8 mm) to support the mesialization additionally to its elastic class II (Fig.3) .
After 11 months of treatment the space was closed and the sagittal relationship preserved as the presence of the third molar which now serves as second molar (Fig. 4).

Figure 3: beginning

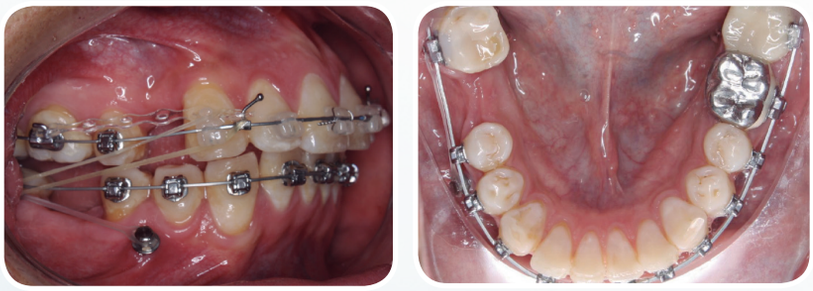

Figure 4: after 11 months

Clinical Cases

A 31 years old male patient needed lower incisor intrusion. Two mini implants (DEWIMED, 6 mm) were inserted distal to both lateral incisors to create a statically determined force system. 40g of force was vertically applied to each lateral incisor. In order to avoid vestibular inclination during intrusion a 0,018 x 0,025" stainless steel full arch wire was used. Periodontal health and teeth vitality were not compromised during intrusion. The complete treatment was finished after 4 months.

beginning

after 7 days

after 3 months

after 4 months

A 23 years old female patient with multiple missing posterior teeth needed anterior teeth retraction. 4 mini implants (DEWIMED, MOSAS 6mm and SLOT 6mm) were vertically inserted on the edentulous alveolar ridge. Mini implants´ heads were joined each other using composite resin to create "dental crowns" which let us bond an adhesive 0,022 x 0,025" tube. Crowns worked as bone anchorage for retraction mechanics.

beginning

beginning

beginning

after 4 months

Clinical Cases

A 11 years old female patient needed unilateral Brodie bite correction. Intrusion and palatal inclination of the upper left first molar and second bicuspid was planned to harmonize the transverse discrepancy. Two mini implants (DEWIMED, MOSAS, 6 mm) were inserted 2 mm away from the midpalatal raphe between first and second bicuspids. The heads of the mini implants were joined to an acrylic button to create a bone anchorage unit. Two hooks were strategically placed into the acrylic and two lingual buttons were bonded on the palatal surfaces of the first molar and second bicuspid. 50 g of force was individually applied to each tooth. Full fixed appliances were used to correct lower first molar lingual inclination and malocclusion.

beginning

beginning

beginning

after 4 months

Ideal requirements for cortical anchorage and advantages:

- Biocompatibility
- Small dimensions
- Ease of placement and use
- Primary stability
- Immediate loading
- Adequate resistance to orthodontic forces
- Use with known orthodontic mechanical systems
- Independent of patient cooperation
- Clinically equal or better results compared to conventional anchorage variants
- Easy to remove
- Low costs
- Meets aesthetic demands

Self-drilling screw systems, such as the O.S.A.S. system, do not require any preparation of the bone. The thread works through the gingiva and cortex without pre-drilling because of its self-tapping tip. Punching the gingiva to prepare a passage is not necessary either with the O.S.A.S. system. In most situations, infiltration anaesthesia can be omitted and the screw can be inserted with surface anaesthesia.

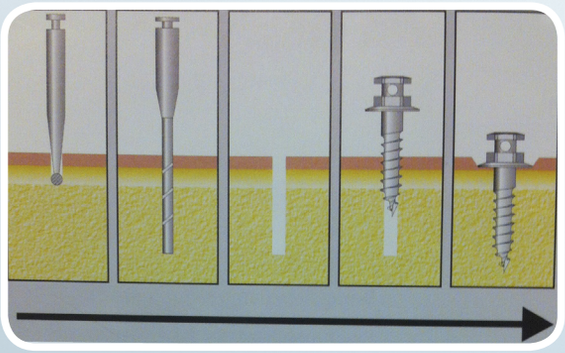

Other systems

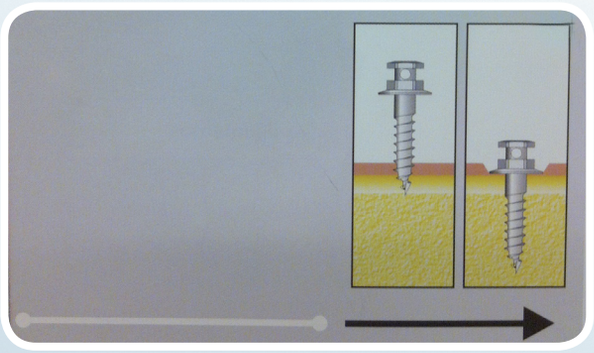

O.S.A.S. System

Direct or Indirect anchorage

In principle, a direct or indirect strategy can be chosen. The direct variant is often easier technically and tooth movements are carried out directly supported by the stationary anchorage. Indirect anchorage means that a dental anchorage segment is formed that is stabilised through the screw, so that active tooth movements take place.

Direct anchorage

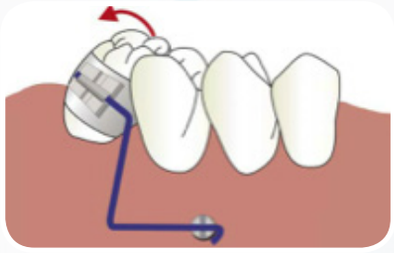

Indirect anchorage; the tooth to be moved is anchored to a tooth that is connected to the Mini screw.

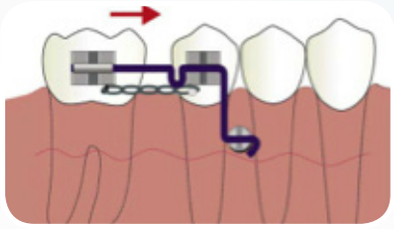

All of the familiar coupling elements used in orthodontics (round wires, rectangular wires, springs and elastic chains) can be used. Each orthodontist can maintain his treatment strategy and use the advantages of cortical anchorage.

Removal after successful treatment is unproblematic. As the fixation of the non-osseointegrating Mini Screws is reduced after a few months as intended, the screws can be removed easily with a screwdriver, usually without anaesthetic. The screwdriver fixes the screw by locking so that the screw cannot slip off into the pharynx. As the dimensions of the screw are a mechanical minimum, they leave no trace after removal and guarantee rapid mucosa-covered healing of the intraoral penetration site.

Healing period of 4 days after removal

Most of the Mini Screws available on the dental market are made of pure titanium and titanium alloys. Compared to pure titanium the alloys provide better mechanical parameters in the categories of strength, elastic behaviour, resistance to wear and surface qualities. The elastic limit is about twice as high so that partial structures such as the thread pitch can be filigree.

Screws are milled from one piece or are made of individual components and then joined together. Screws made from a single piece, like DEWIMED O.S.A.S., appear to be more stable mechanically due to their homogeneous material structure. Screw bodies composed of joined parts involve a risk of fracture on incorrect loading in the form of a break point.

In the area of the functional screw head, a large number of variants is also available with sometimes substantial differences in structure. With some systems, the user has a choice of up to over 70 different types of the screw designed for the respective treatment. For each screw body, a wide range of attachable heads and screw sizes is often suggested for solving the various treatment tasks. This makes case-related selection complex and requires a large number to be stocked.

The screw may be loaded functionally without a healing period. Immediate loading has a beneficial effect on contact with the surrounding bone and promotes the quality of the anchorage.

Self-drilling and tapping to facilitate placement, the shape of the head inhibits the overgrowth of the gingival.

With only a few screws, strategically placed it will have creative solutions of orthodontic and orthopedic.

The self-tapping O.S.A.S. system is made in one piece of a titanium-based biocompatible alloy. The joint-free one-piece technology guarantees particular mechanical stability and protects against material defects. The thread has a centring tip, which is very easy to insert. The cylindrical thread shaft ensures good hold in bone and tolerates greater loading than the conical construction.

Recommended position of the O.S.A.S. screws

- Screws with lengths of **7 – 9 mm**
- Screws with lengths of **5 – 7 mm**
- Screws with lengths of **8 – 10 mm**
- Screws with lengths of **5 – 8 mm**
- Screws with lengths of **9 – 12 mm**

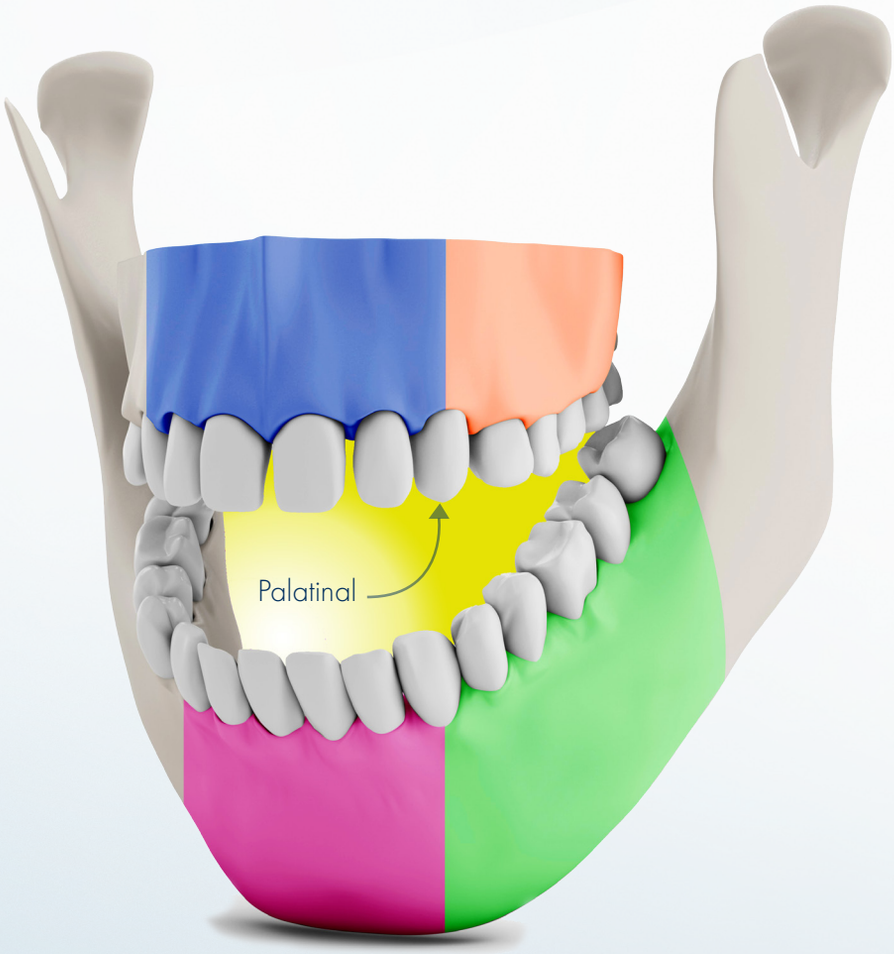

O.S.A.S. SLOT Screw

Hexagonal Head

- Round edges
- Open head for easy insertion

Perforation of Ø 0,8 mm

- Suitable for all current wires
- Safe location of the wire

Shaft of 1mm

- Without any thread for perfect closing
- For optimal gingiva adaption

Cylindrical form of threat

- Provides easy entering
- Special thread avoids squeezing of the gingiva
- loss of screw completely avoided, thanks to the extraordinary shape

Tip

- Selfcutting and self-drilling tip
- No pilot holes necessary

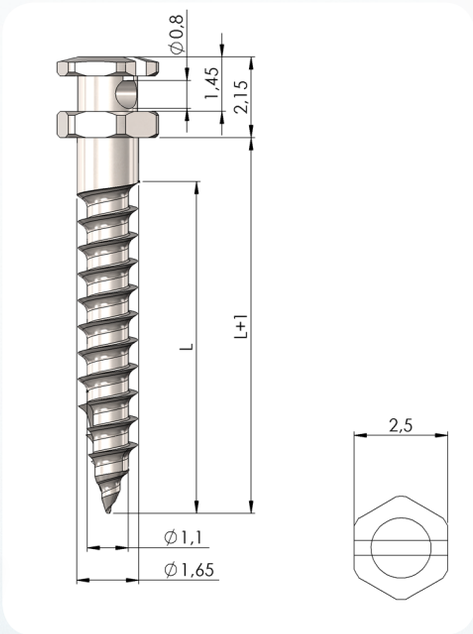

Length	O.S.A.S. SLOT Screw Ø 1,6 mm	Packing Unit
5 mm	25-16105	5 screws
6 mm	25-16106	5 screws
7 mm	25-16107	5 screws
8 mm	25-16108	5 screws
9 mm	25-16109	5 screws

O.S.A.S. CROSS HEAD Screw

Hexagonal Head

- Round edges
- Closed head to fix the wire
- Safety anchorage of the wire

Perforation of Ø 0,8 mm

- Suitable for all current wires
- Safe location of the wire

Shaft of 1mm

- For optimal gingiva adaption

Cylindrical form of threat

- Provides easy entering
- Special thread avoids squeezing of the gingiva
- loss of screw completely avoided, thanks to the extraordinary shape

Tip

- Selfcutting and self-drilling tip
- No pilot holes necessary

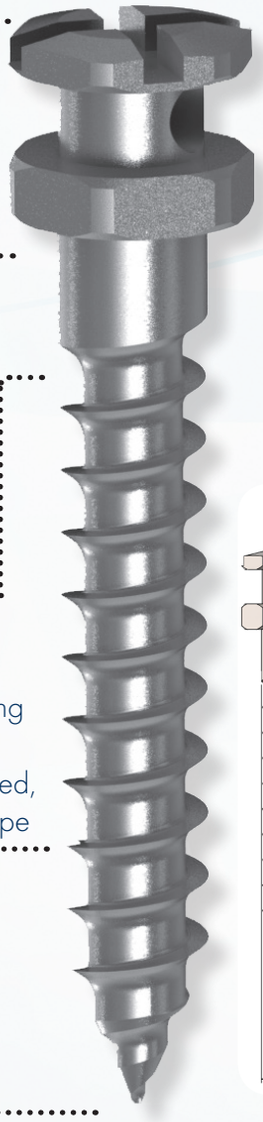

O.S.A.S MINI Screw diameter of Ø1,3 mm

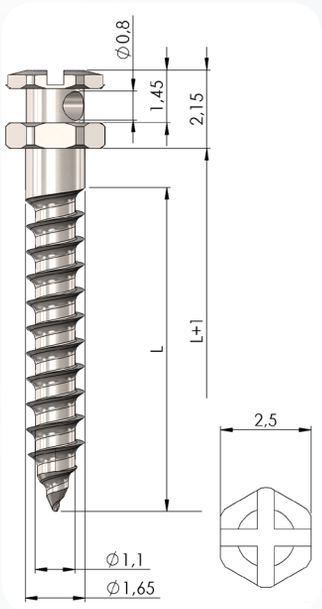

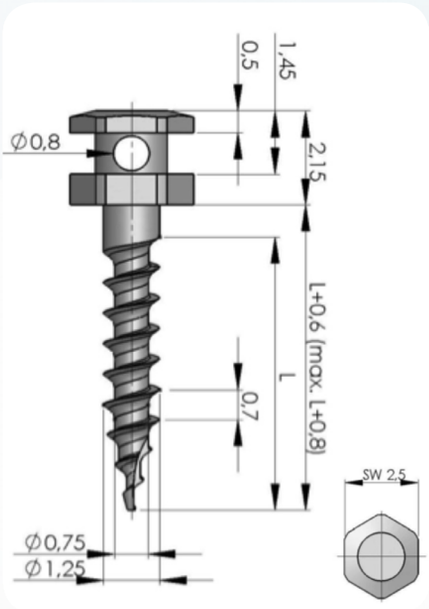

Length	O.S.A.S. CROSS HEAD Screw Ø 1,6 mm	O.S.A.S. MINI Screw Ø 1,3 mm	Packing Unit
5 mm	25-16115	25-16235	5 screws
6 mm	25-16116	25-16236	5 screws
7 mm	25-16117	25-16237	5 screws
8 mm	25-16118	25-16238	5 screws
9 mm	25-16119		5 screws

O.S.A.S. CROSS HOLE Screw

Hexagonal Head

- Round edges
- Closed head to fix the wire
- Safety anchorage of the wire

2 Perforations of Ø 0,8 mm

- Suitable for all current wires
- Safe location of the wire
- Always perfect position thanks to two perforations

Shaft of 1mm

- For optimal gingiva adaption

Cylindrical form of threat

- Provides easy entering
- Special thread avoids squeezing of the gingiva
- loss of screw completely avoided, thanks to the extraordinary shape

Tip

- Selfcutting and self-drilling tip
- No pilot holes necessary

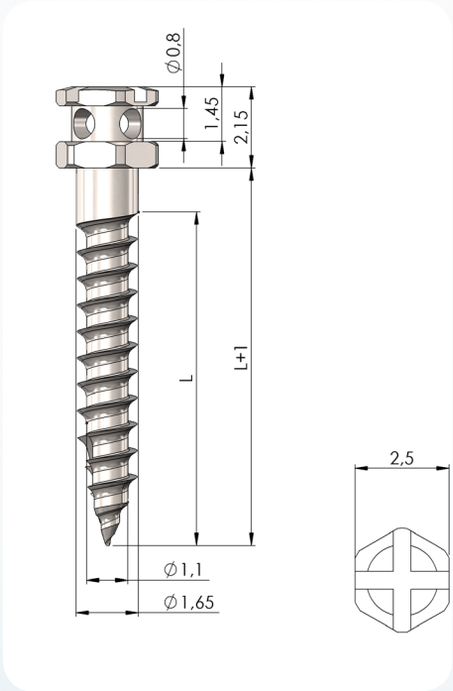

Length	O.S.A.S. CROSS HOLE Screw Ø 1,6 mm	Packing Unit
5 mm	25-16125	5 screws
6 mm	25-16126	5 screws
7 mm	25-16127	5 screws
8 mm	25-16128	5 screws
9 mm	25-16129	5 screws

M.O.S.A.S. Screw

Hexagonal Head

- Round edges
- Closed head to fix the wire

Perforation of Ø 0,8 mm

- Suitable for all current wires
- Safe location of the wire

Additional plate

- To avoid rank growth of the gingiva over the screw
- Comfortable for the patient

Shaft of 2mm

- For optimal gingiva adaption, especially for unatached gingiva

Cylindrical form of threat

- Provides easy entering
- Special thread avoids squeezing of the gingiva
- loss of screw completely avoided, thanks to the extraordinary shape

Tip

- Selfcutting and self-drilling tip
- No pilot holes necessary

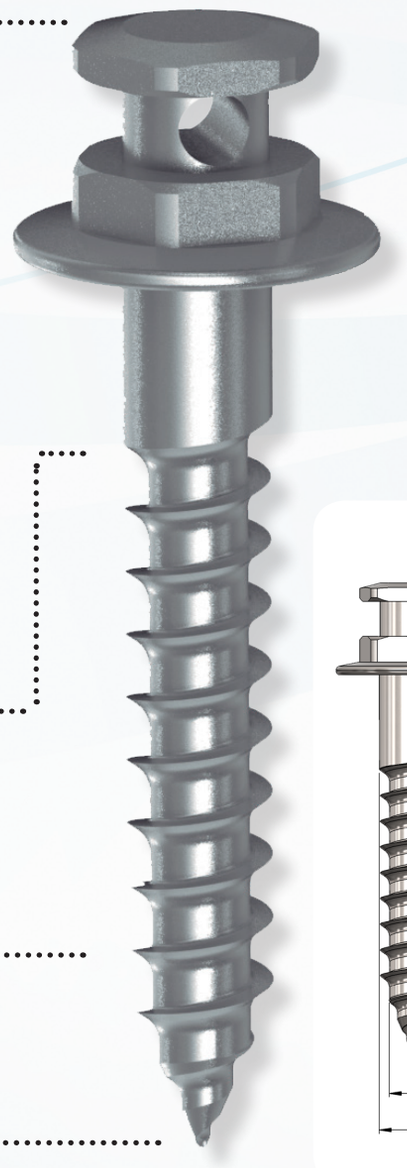

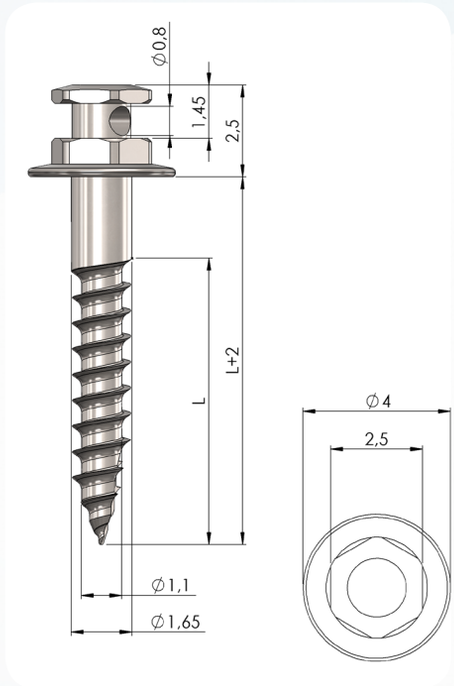

Length	M.O.S.A.S. Screw Ø 1,6 mm	Packing Unit
6 mm	25M-16206	5screws
7 mm	25M-16207	5 screws
8 mm	25M-16208	5 screws
10 mm	SA-0912-04	1 screw Pre-Drill recommended
12 mm	SA-0912-05	1 screw Pre-Drill recommended

D.O.S. Screw

CROSS HEAD **CROSS HOLE** **PLATE**

The same characteristics as the O.S.A.S. / M.O.S.A.S. screws

Further development: round and elevated head for an additional possiblity to fix a wire or rubber chain to use a second vector

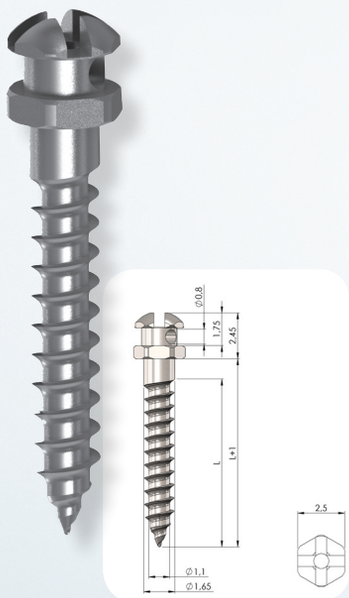

D.O.S. Cross Head

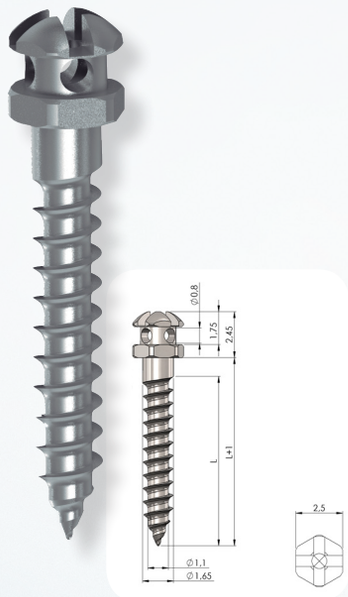

D.O.S. Cross Hole

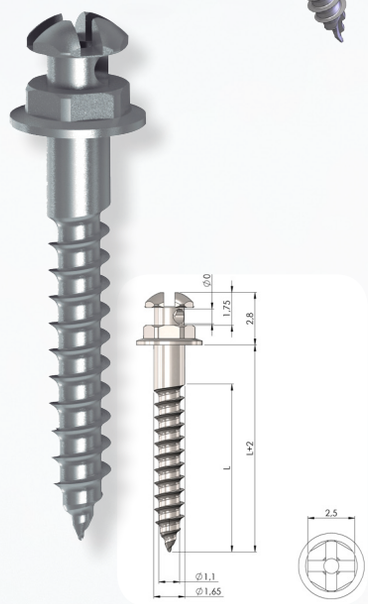

D.O.S. Plate

Length	D.O.S. Cross Head Ø 1,6 mm	D.O.S. Cross Hole Ø 1,6 mm	D.O.S. Plate Ø 1,6 mm	Packing Unit
5 mm	25-16135	25-16145	25-16155	5 screws
6 mm	25-16136	25-16146	25-16156	5 screws
7 mm	25-16137	25-16147	25-16157	5 screws
8 mm	25-16138	25-16148	25-16158	5 screws
9 mm	25-16139	25-16149	25-16159	5 screws

special fine tip available for better view to the working area
strong connection from tip to screw

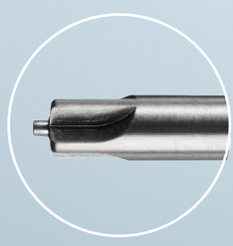

Baxmann Lingual O.S.A.S.

available shortly

Bracket Head
- Built in well-known DEWIMED shape and quality
- perfect condition to fix abudments in a safe way

Conically shaped neck
- Allows optimal adaptation of the significantly thicker palatal soft tissue when compared to the buccal area

Additional micro thread
- Encreases the primary stability and reduces the risk of premature loss

Length of the screw
- Specifically designed for the best possible fit within anatomical region of the palate
- special thread allows easy instertion and security of stability

Self cutting thread
- Built in well-known DEWIMED shape and quality
- optimal construction of the tip for smooth insertion into the tissue

Instruments

All instruments can be used for all variations of screws
All instruments are available individually

Handles

Universal Screwdriver 2 in 1 10-0014

Short handle, Screwdriver 10-0003

Blades

O.S.A.S. Driver Tip, 70mm 10-0005

O.S.A.S. Driver Tip, 40mm 10-0004

O.S.A.S. Driver Tip, 10mm 10-0006

D.O.S. Driver Tip, 40mm 10-0040

The blades lock into the screwdriver through an easy snap mechanism.

The blades hold the screw securely and keep it in a stable position by hexagonal mounting with spherical attenuation, which matches the outline of the screw head. Because it is held firmly, insertion is successful even in places that are difficult of access.

Blades for Angle Handpieces

O.S.A.S Butter fly driver tip SA-0701-07

Blade for Angle Handpiece, 5 mm 10-0007

Blade for Angle Handpiece, 10 mm 10-0008

D.O.S. Driver Tip for contra handle, 10 mm 10-0042

Accessories

Ratchet and accessories for optimal adaption for the lingual position of the screw

Ratchet screwdriver, handle 10-0012

Blade for Ratchet, 10 mm 10-0009

Blade for Ratchet, 30 mm 10-0010

Repair Kit for for Screwdriver tip
40 balls, 20 O-rings 10-0100

Racks

- Storage of screws and instrument
- Additional support to check the length of screws

O.S.A.S. Rack MICRO

DEWIMED Code: **10-0029** (without screws)

- storage possibility for 6 screws

O.S.A.S. Sterilization Rack MINI

DEWIMED Code: **10-0020** (without instruments)

- For short screwdriver, short blade for screwdriver and blade for angle handpiece
- storage possibility for 5 screws of each length (20 screws)

O.S.A.S. Sterilization Rack MIDI

DEWIMED Code: **10-0025** (without instruments)

- For standard or universal screwdriver , short screwdriver, short blade for screwdriver, blade for angle handpiece and long blade for screwdriver (40mm or 70mm), storage below the screwdriver
- storage possibility for 60 screws

O.S.A.S. Sterilization Rack ALL-IN-ONE

DEWIMED Code: 10-0022 (without instruments)

- For universal screwdriver, short screwhandle, short blade for screwdriver, blade for angle handpiece and long blade for screwdriver (40mm or 70mm), storage below the screwdriver
- storage of 5 X-Ray pins
- storage possibility for 4 screws of each length and M.O.S.A.S. Screws (24 screws)

O.S.A.S. Sterilization Rack MAXI

DEWIMED Code: 10-0000 (without instruments)

- All DEWIMED Instruments and Blades could be stored in the O.S.A.S. Maxi Rack
- storage possibility for 50 screws

Manually turned handpiece with / without torque

Manually turned handpiece mod. to Pauls,
with adjustable torque from 0 - 50 Ncm

The manually turned handpiece is connected to your existing angled motor handpiece (blue 1:1) which allows it to be used like an angled screwdriver.

10-0018

Manually turned handpiece mod. to Pauls, with adjustable torque from 0 - 50 Ncm

10-0017

The manually turned handpiece for angled screwdriver with lightsource

Notes / Notas

CERTIFICATE

EN ISO 13485:2012 + AC:2012

DEKRA Certification GmbH hereby certifies that the company

DEWIMED Medizintechnik GmbH

Scope of certification:
Manufacturing, development and sales of surgical instruments, rotary dental instruments, electrosurgical units, electrosurgical instruments and accessories, sterilization container and trays, orthopedic implants, aneurysm clips and surgical lights

Certified location:
Unter Hasslen 14, 78532 Tuttlingen, Germany

has established and maintains a quality management system according to the above mentioned standard. The conformity was adduced with audit report no. 50212-Z4-00.

This certificate is valid from 10.06.2014 to 13.05.2017

Certificate registration no.: 50212-11-00
Duplicate

Akkreditiert durch
Zentralstelle der Länder
für Gesundheitsschutz
bei Arzneimitteln
und Medizinprodukten
ZLG-ZQ-992.00.02-46

DEKRA Certification GmbH
Stuttgart, 10.06.2014

Lack of fulfillment of conditions as laid out in the Certification Agreement may render this certificate invalid.

DEKRA Certification GmbH * Handwerkstraße 15 * D-70565 Stuttgart * www.dekra-certification.de

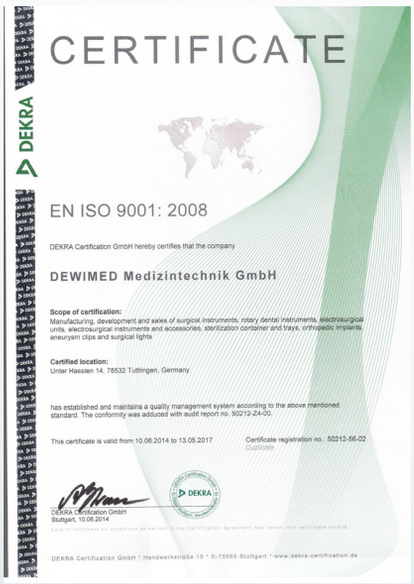

CERTIFICATE

EN ISO 9001: 2008

DEKRA Certification GmbH hereby certifies that the company

DEWIMED Medizintechnik GmbH

Scope of certification:
Manufacturing, development and sales of surgical instruments, rotary dental instruments, electrosurgical units, electrosurgical instruments and accessories, sterilization container and trays, orthopedic implants, aneurysm clips and surgical lights

Certified location:
Unter Hasslen 14, 78532 Tuttlingen, Germany

has established and maintains a quality management system according to the above mentioned standard. The conformity was adduced with audit report no. 50212-Z4-00.

This certificate is valid from 10.06.2014 to 13.05.2017

Certificate registration no.: 50212-56-02
Duplicate

DEKRA Certification GmbH
Stuttgart, 10.06.2014

Lack of fulfillment of conditions as laid out in the Certification Agreement may render this certificate invalid.

DEKRA Certification GmbH * Handwerkstraße 15 * D-70565 Stuttgart * www.dekra-certification.de

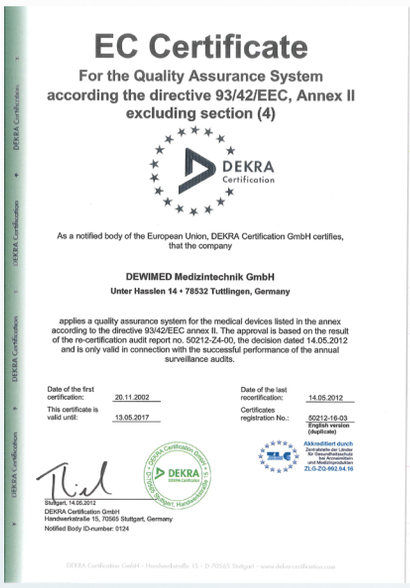

EC Certificate

For the Quality Assurance System according the directive 93/42/EEC, Annex II excluding section (4)

As a notified body of the European Union, DEKRA Certification GmbH certifies, that the company

DEWIMED Medizintechnik GmbH
Unter Hasslen 14 • 78532 Tuttlingen, Germany

applies a quality assurance system for the medical devices listed in the annex according to the directive 93/42/EEC annex II. The approval is based on the result of the re-certification audit report no. 50212-Z4-00, the decision dated 14.05.2012 and is only valid in connection with the successful performance of the annual surveillance audits.

Date of the first certification: 20.11.2002

This certificate is valid until: 13.05.2017

Date of the last recertification: 14.05.2012

Certificates registration No.: 50212-16-03
English version (duplicate)

Akkreditiert durch
Zentralstelle der Länder
für Gesundheitsschutz
bei Arzneimitteln
und Medizinprodukten
ZLG-ZQ-992.94.16

Stuttgart, 14.05.2012
DEKRA Certification GmbH
Handwerkstraße 15, 70565 Stuttgart, Germany
Notified Body ID-number: 0124

DEKRA Certification GmbH • Handwerkstraße 15 • D-70565 Stuttgart • www.dekra-certification.com

Authorized Distributor:

DEWIMED Medizintechnik GmbH
Unter Hasslen 14
D 78532 Tuttlingen - Germany
Fon: +49 74 62 923 93-0
Fax: +49 74 62 923 93-33
info@dewimed.de
www.dewimed.de

Version: 07/2016
Art.-Nr.: 00.030.18